Marine Grade Faucets

Universal Pull-Out Galley Faucet
Model # 132-0003-CP

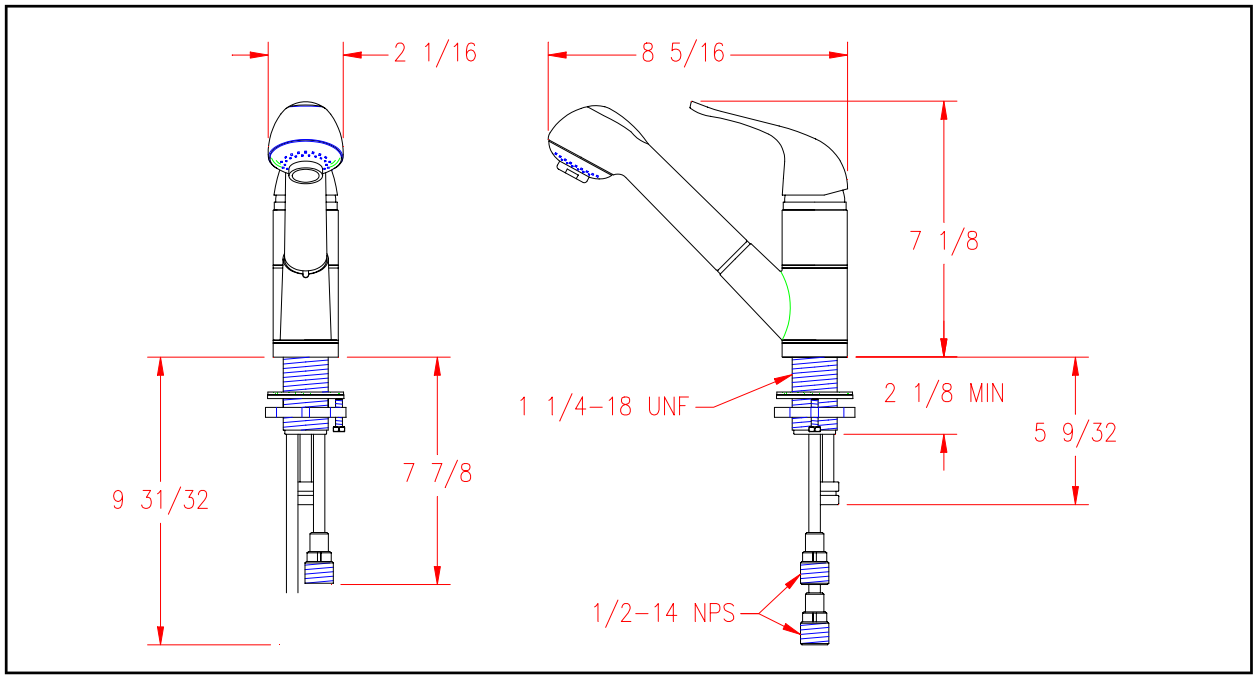

LIMITED WARRANTY

SHURflo Marine Grade Faucets & Accessories are guaranteed to be free from material and workmanship defects under normal use and service for a period of (3) three years from the date of manufactured vessel for all indoor applications and (2) two years from the date of manufactured vessel for all outdoor applications. This limited warranty will not apply to faucets or accessories that were improperly installed, misapplied, or incompatible with components not manufactured by SHURflo. Faucet failure due to foreign debris is not covered under the terms of this limited warranty. SHURflo will not warrant any faucet that is physically damaged, or altered outside the SHURflo factory. Warranty claims may be resolved by a SHURflo service center. All returns are to be shipped with charges pre-paid. Package all returns carefully. SHURflo will not be responsible for freight damage incurred during shipping to a service center. SHURflo's obligation under this warranty policy is limited to the repair or replacement of the faucets & accessories. Faucets or accessories found not defective (under the terms of this limited warranty) are subject to charges to be paid by the returnee for the testing and packaging of "tested good" units. Warranty returns will be shipped on a freight allowed basis. SHURflo reserves the right to choose the method of transportation. SHURflo is not responsible nor will it reimburse for labor necessary to remove and reinstall a faucet or accessory, if found defective. This warranty is only a representation of the complete Marine Products Limited Warranty outlined by Service Bulletin #1050.

★SHURflo reserves the right to update specifications, prices, or make substitutions.

SHURflo *
5900A Katella Ave.
Cypress, Ca 90630
(562) 795-5200 (800) 854-3218
Fax: (562) 795-7564
Shipping: 5900C Katella Ave.
Cypress, CA 90630

SHURflo East
52748 Park Six Court
Elkhart, IN 46514-5427
(574) 262-0478 (800) 762-8094
FAX (574) 264-2169
http://www.shurflo.com

SHURflo Ltd. *
Unit 5 Sterling Park
Gatwick Road, Crawley
West Sussex, RH10 2QT
United Kingdom
+44 1293 424000
FAX +44 1293 421880

© 2002 Printed in USA