132-0003-xx-6'

REV.	CHANGE
A	Ambassador Branded
B	Refreshed

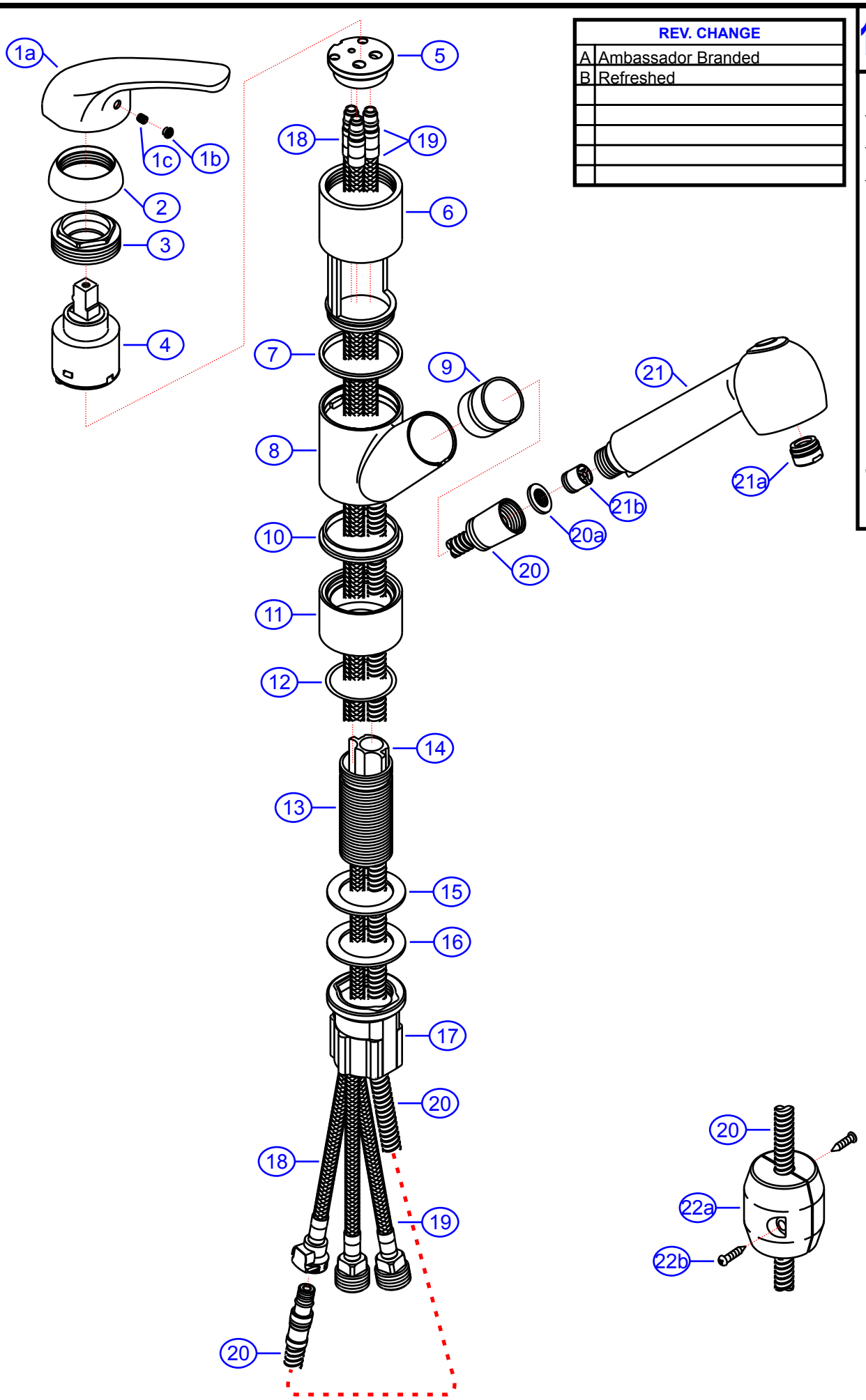

www.ambassadormarine.com 800.270.4262	© Ambassador Marine, Inc.	Model # 132-0003-xx-6'	Series Pacifica (Universal)	Type Pull-Out Galley Faucet
Ambassador MARINE		Rev # B	Package Style OEM	ERP # N/A	Drawn By SS	Approved/Modified 11/10/20

NOT DRAWN TO SCALE

132-0003-xx-6'

Pacifica (Universal)
Pull-Out Galley Faucet
Rev. B

(800) 270-4262
www.ambassadormarine.com

#	Description	Qty	Part #	Finish Code Suffix (i.e. EA-123456CP)					Material
				CP	NP				
1	Pacifica- Handle Assembly	1	LA-038701	CP	NP				-
1a	Pacifica- Handle	1	L-038671*	CP	NP				ZnA14
1b	Red/Blue Plug	1	L-042010						Silicone
1c	Set Screw	1	L-020005						SUS304
2	Cap	1	L-063483	CP	NP				ABS
3	Retainer Nut	1	L-058661						SUS304
4	Ceramic Disk Cartridge	1	L-530048						-
5	Cartridge Plate	1	L-048149N*						HBi60
6	Body	1	L-107066*	CP	NP				ZnA14
7	Packing Ring	1	L-024460*						POM
8	Spout Hub	1	L-106876*	CP	NP				ZnA14
9	Hose Nest	1	L-056163*						PP
10	Packing Ring	1	L-024460*						POM
11	Base	1	L-032378*	CP	NP				HPb59
12	O-Ring	1	L-027185						NBR
13	Mounting Shaft	1	L-071099*						H62
14	Hose Guide	1	L-065090*						ABS
15	Washer (Rubber)	1	L-024002						NBR
16	Washer (Metal)	1	L-024003						SUS302
17	Mounting Nut (Easy Grip)	1	L-056101						-
18	Connector Hose (Quick Connect-Female)	1	L-300251N						-
19	Connector Hose (Red)	1	L-300232NH						-
	Connector Hose (Blue)	1	L-300232NC						-
20	6' Stainless Steel Hose Assembly	1	130-0044- _ _	SS	SS				-
20a	Screen Washer	1	L-024491						-
21	Pull-Out Kitchen Sprayer	1	138-0401- _ _	CP	NP				-
21a	Aerator	1	L-554073-Q	CP	NP				-
21b	Back Flow Preventer	1	L-554073-Z						-
22	Weight Assembly	1	LA-098006						-
22a	Weight	1	L-98006-H*						-
22b	Screw	2	L-98006-S*						-

* - Part is not available individually. "Assembled" item is required.

All sub-components included within assembly (i.e. "1" includes "1a", "1b", "1c", etc.)

Revised: 1/8/2024