135-0405-xx

Rev.	Change
A	Original
B	
C	
D	

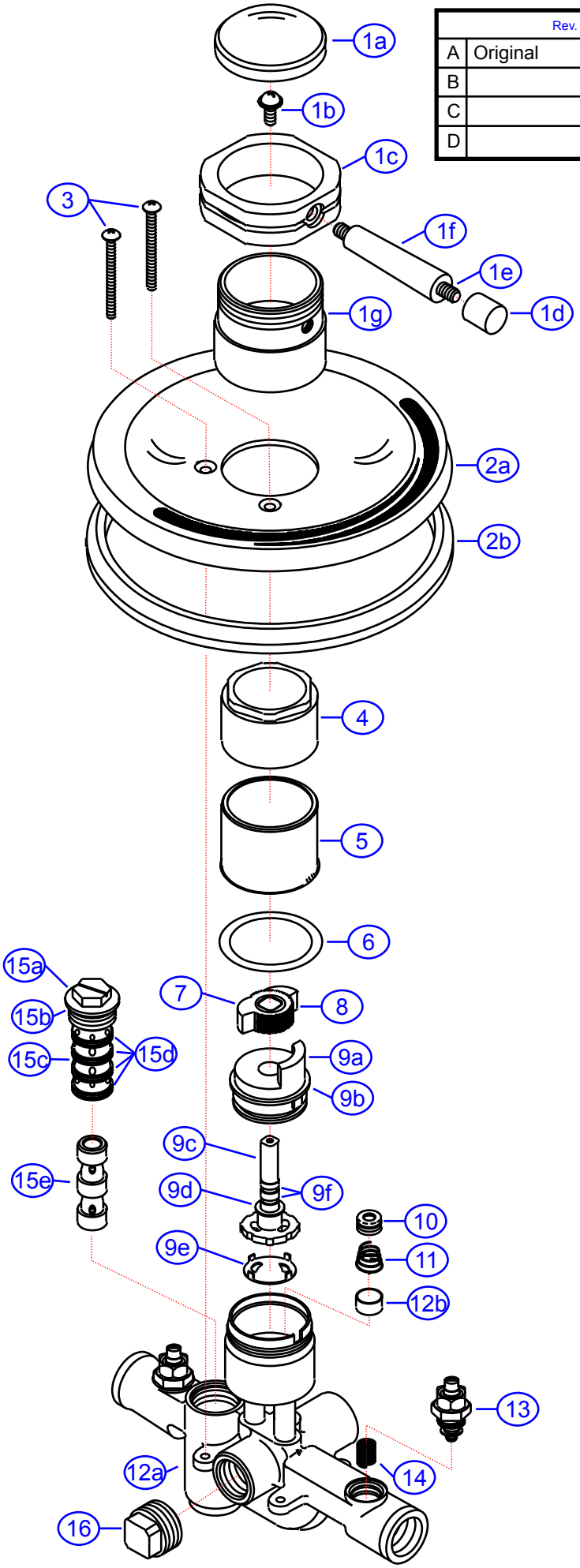

SHURflo Marine Grade Faucets
5900 Katella Ave., Cypress, CA 90630
800.854.3218 • 562.795.5200 • Fax 562.795.7564
www.shurflo.com

Rev # A	Package Style Aftermarket	Model # 135-0405-xx	
Vendor # A661108xx-ASC8		Series Pisces	
Drawn By SS	Approved/Modified 02/17/10	Type Shower Mixer (Pres. Bal.)	

NOT DRAWN TO SCALE

135-0405-xx

Pisces

Shower Mixer (Pressure Balanced)

Rev. A

#	Description	Part #	Finish						Qty
			CG						
1	Pisces Handle Assembly	EA-506852	CG						1
1a	Cap	E-206047	CP						1
1b	Handle Screw	E-008000							1
1c	Trim Ring	E-218007*	GP						1
1d	Handle Tip	E-109006*	GP						1
1e	Handle Rod	E-017015*							1
1f	Handle Sleeve	E-108039*	CP						1
1g	Canopy	E-018061*	CP						1
2	Face Plate Assembly	EA-556100	CP						1
2a	Face Plate	E-007041*	CP						1
2b	Gasket	E-060055							1
3	Screw	E-075143	CP						2
4	Retainer Nut	E-103020	GP						1
5	Sleeve	E-217005	GP						1
6	O-Ring	E-004008							1
7	Temp. Restrictor A	E-049000							1
8	Temp. Restrictor B	E-049001							1
9	Cartridge Assembly	EA-507049							1
9a	Cartridge Body	E-214011*							1
9b	O-Ring	E-048016*							1
9c	Cartridge Stem	E-024112*							1
9d	Metal Washer	E-013050*							1
9e	Stem Plate	E-308006*							1
9f	O-Ring	E-004118*							2
10	Seat	E-101036							2
11	Spring	E-005000							2
12	Valve Body Assembly	G-X3111							1
12a	Valve Body	E-044061							1
12b	Seat&Spring Housing	E-106001*							2
13	Shut Off Valve	E-507037							2
14	Shut Off Valve Spring	E-005012							2
15	PB System (Assembled)	EA-507041							1
15a	PB Head	E-009094*							1
15b	O-Ring	E-048025*							1
15c	PB Spool	E-214015*							1
15d	O-Ring	E-048024*							4
15e	PB Tumbler	E-208041*							1
16	Tub Spout Cap	E-028004							1

* - Part is not available individually. "Assembled" item is required.

** - Assembly is in-stock at SHURflo and must be shipped directly from SHURflo's distribution center.

Prepared Exclusively For

SHURflo Marine Grade Faucets

Revised 1/12/2012