S00-0108-xx

REV.	CHANGE
A	Ambassador Branded

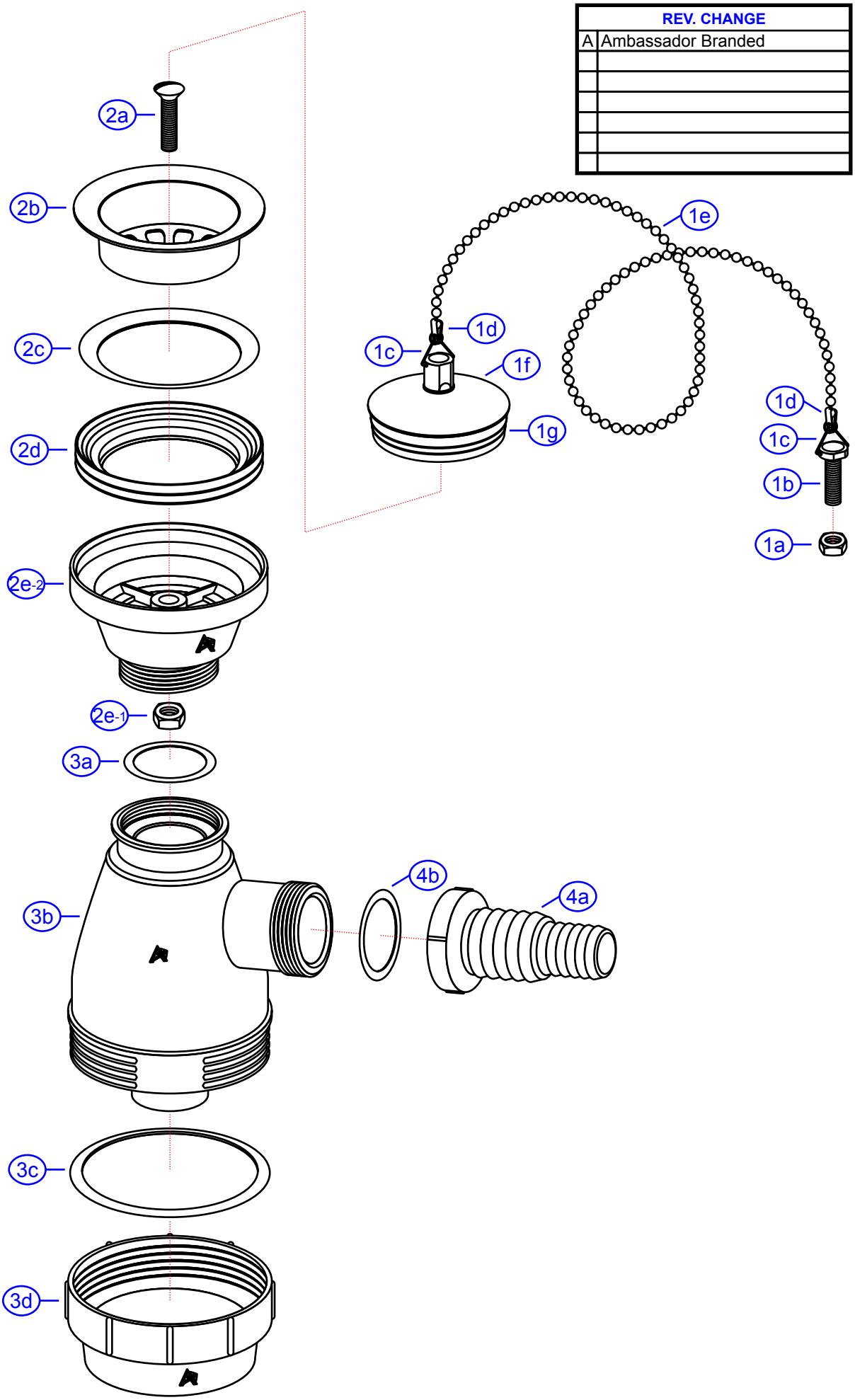

www.ambassadormarine.com
800.270.4262

© Ambassador Marine, Inc.

Ambassador MARINE

Model # S00-0108-xx	Series 2" Drain	Type Trap Drain	
Rev # A	Package Style OEM		
ERP # S00-0108-xx		Approved/Modified 09/22/2024	
Drawn By SS			

NOT DRAWN TO SCALE

S00-0108-xx

2" Drain

Trap Drain w/Chain Stopper (3/4" & 1" Hose Barb)

Rev. A

(800) 270-4262
www.ambassadormarine.com

#	Description	Qty	Part #	Finish Code Suffix (i.e. EA-123456CP)					Material
				BP	UP				
1	2" Drain Chain Stopper Assembly	1	S00-0110- _ _	UP	UP				-
1a	Nut	1	SDP-0001						SUS304
1b	Screw	1	SDP-0002						SUS304
1c	Triangle Connector	2	SDP-0003						SUS304
1d	Chain Connector	2	SDP-0004						SUS304
1e	Chain	1	SDP-0005						SUS304
1f	Cover	1	SDP-0006- _	UM	UM				SUS304
1g	Plug	1	SDP-0007*						PVC
2	2" Straight Drain Assembly	1	S00-0004- _ _	BP	UP				-
2a	Screw (30mm x M6-1)	1	SDP-0019						SUS304
2b	Flange	1	SDP-0009- _	BR	UM				SUS304
2c	Foam Gasket	1	SDP-0010						PE
2d	Rubber Gasket	1	SDP-0011						PVC
2e	Body Assembly	1	SDA-1001						-
2e-1	Screw Receiver (M6-1)	1	SDP-0001						SUS304
2e-2	Body Housing	1	SDP-0020*						PP
3	Trap Drain Body Assembly	1	S00-0016-_ _	PL	PL				-
3a	Rubber Gasket	1	SDP-0021						PVC
3b	Trap Body	1	SDP-0024						PP
3c	Rubber Gasket	1	SDP-0025						PVC
3d	Trap Cup	1	SDP-0026						PP
4	Strainght Hose Barb (3/4" & 1" Hose) Assembly	1	S00-0020-_ _	PL	PL				-
4a	1 1/4"-F Thread to 3/4" & 1" Hose Barb	1	SDP-0022*						PP
4b	Rubber Gasket	1	SDP-0021						PVC

* - Part is not available individually. "Assembled" item is required.

All sub-components included within assembly (i.e. "1" includes "1a", "1b", "1c", etc.)

Revised: 9/27/2024