Rev.	Change
A	Ambassador branded
B	
C	
D	
E	
F	
G	

www.ambassadormarine.com
(800) 270-4262

Model # **130-1808-xx**

Rev # **A**

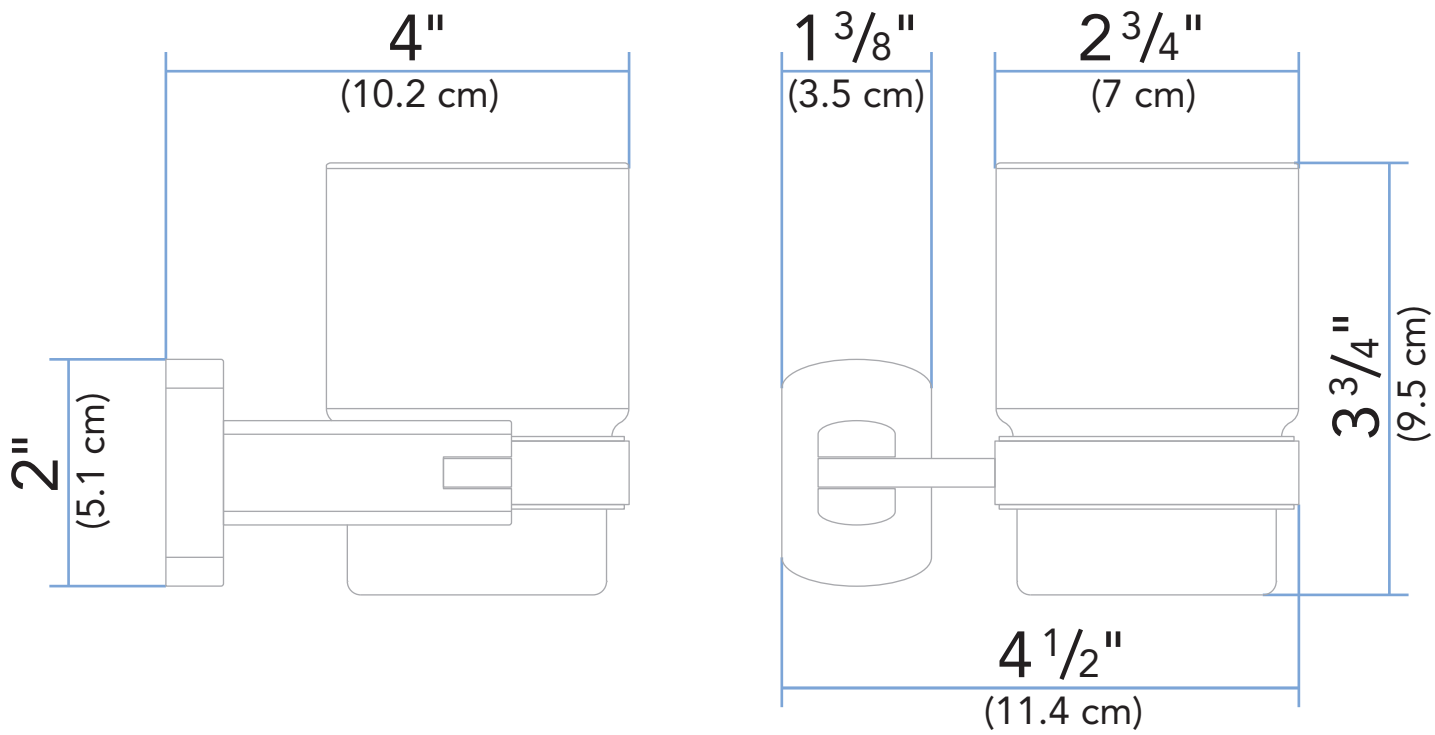

ALL DIMENSIONS ± 1/16"
SOME COMPONENTS MAY NOT BE DRAWN TO SCALE